USN | | | | | | | | | | | [22ESEE13]

FIRST SEMESTER B.Tech EXAMINATION, DECEMBER 2022

FUNDAMENTALS OF ELECTRICAL AND ELECTRONICS ENGINEERING

Time: 3 Hours **Maximum Marks: 100**

Instructions: **i.** Missing data may be suitably assumed.

PART-A (5 X 2=10)

ANSWER ALL QUESTIONS

1.	**a.**	State Ohm's law.	L- 1	CO1	**02**
	b.	Plot a sine wave with amplitude V_m and with period T. Mark the peak value and period.	L- 2	CO2	**02**
	c.	What are the functions of a transformer?	L- 1	CO3	**02**
	d.	Draw the Forward & Reverse characteristics of a PN junction diode.	L- 2	CO4	**02**
	e.	Mention few applications of a Zener diode.	L- 1	CO5	**02**

PART-B (6 x 5=30)

2.	**a.**	Using voltage divider technique, determine voltage across the resistances in the circuit. 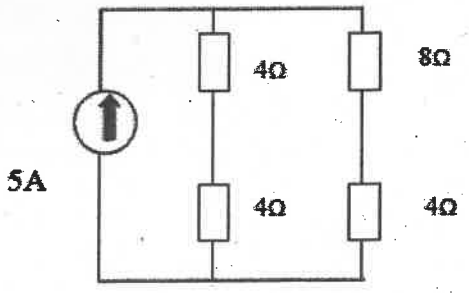	L- 4	CO1	**05**
		OR			
	b.	Two resistors of 5 Ω and 10 Ω are connected in parallel. The total current drawn from the circuit is 12 A. Determine the power developed by each resistor.	L- 4	CO1	**05**
3.	**a.**	A series circuit consists of resistance =10 Ω, inductance = 50 mH and capacitance = 100 μF. The circuit is supplied with 200 V, 50 Hz. Find **i.** The impedance **ii.** Current **iii.** Power	L- 4	CO2	**05**
		OR			
	b.	Sketch the waveform of a current given by i = 10 Sin 314t A and find its maximum, RMS and average values. Also find its frequency	L- 4	CO2	**05**

4.	a.	With usual notations derive the expression for the induced emf in a 1Φ transformer.	L- 3	CO3	05
		OR			
	b.	Obtain an expression for efficiency of a single phase transformer for various load condition.	L- 3	CO3	05
5.	a.	Summarize the principle of avalanche breakdown in PN junction diodes.	L- 2	CO4	05
		OR			
	b.	Discuss the principle of operation of PN junction diode.	L- 2	CO4	05
6.	a.	Draw the symbol and write the general specifications of Zener diode.	L- 2	CO5	05
		OR			
	b.	Explain the working of simple Zener Diode as a voltage regulator.	L- 2	CO5	05
7.	a.	Write the branch current equations in the circuit shown and determine the currents by applying Kirchhoff's laws. 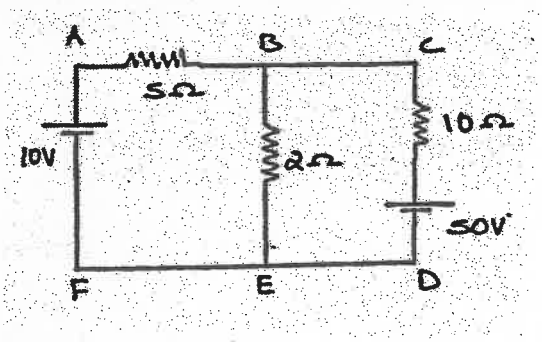	L- 4	CO6	05
		OR			
	b.	With necessary graphs, explain the forward and reverse characteristics of PNP transistors.	L- 3	CO6	05

PART-C (6 X 10=60)

8.	a.	i. Show that equivalent resistance of a group of resistors connected in parallel is the reciprocal of the sum of the reciprocals of each resistance. ii. Show that equivalent resistance of a group of resistors connected in series is the sum of each resistance.	L- 3	CO1	10
		OR			
	b.	State and explain Kirchhoff's Laws (both KVL & KCL). Mention its advantages, disadvantages and applications. Also explain the principle behind Kirchhoff's laws.	L- 2	CO1	10
9.	a.	Establish the relation between voltage, current and power in RLC series circuit, for different cases. Draw the phasor diagrams.	L- 3	CO2	10
		OR			
	b.	Derive the expression for rms value and average value of an			

		sinusoidal alternating current in terms of maximum value.	L- 3	CO2	**10**
10.	**a.**	Explain the principle of operation of a transformer. With neat sketches explain the constructional features of different types of transformers.	L- 2	CO3	**10**
		OR			
	b.	What are the different losses that occur in a transformer? Explain each losses. Define the transformation ratio and regulation of a transformer	L- 2	CO3	**10**
11.	**a.**	Explain the input and output characteristics of common emitter configuration NPN transistors with neat diagrams.	L- 3	CO4	**10**
		OR			
	b.	With a neat diagram and necessary waveforms explain the working principle of a half wave rectifier and hence derive the equation of average dc output voltage.	L- 3	CO4	**10**
12.	**a.**	Explain the working of a full wave bridge rectifier with neat diagram.	L- 2	CO5	**10**
		OR			
	b.	With the block diagram, explain the working of a regulated power supply.	L- 2	CO5	**10**
13.	**a.**	If 20 V is applied across AB, calculate the total current and equivalent resistance of the circuit. 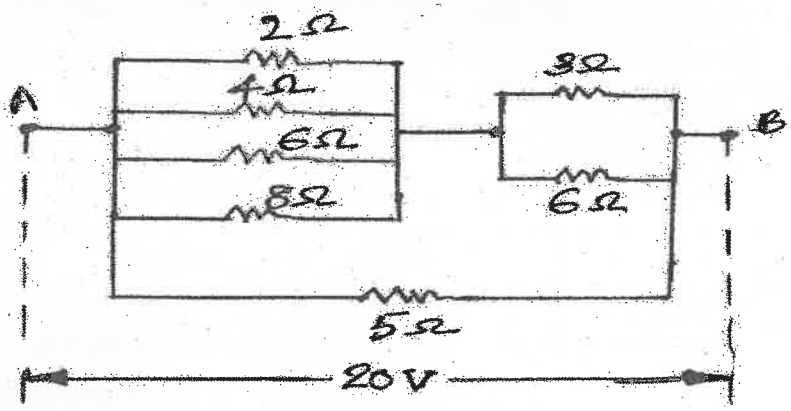	L- 4	CO6	**10**
		OR			
	b.	i. Show that the current in a pure inductive circuit lags behind the voltage across it by 90 degrees. ii. A pure inductive coil allows a current of 10A to flow from 230 V, 50 Hz supply. Find inductive reactance, inductance of the coil and also write down the equations for current and voltage.	L- 4	CO6	**10**